Datasheet

VULKANO Evaluation Kit

Version 2.0

© TrueSense S.r.l All Rights Reserved.

Revision History

Revision	Date	Change Description
1.1	Jun-2022	Preliminary version

© TrueSense S.r.l All Rights Reserved.

Table of Contents

1. Introduction **4**

2. Kit Contents **4**

2.1 QN9090 Carrier Board **4**

2.2 DCU 040 Module adapter board **6**

2.3 DCU 150 Module adapter board **6**

3. Block Diagram **7**

4. Connect hardware **8**

4.1 Plug DCU040 or DCU 150 adapter board to Carrier board **8**

4.2 Power the board & Mode Selection **9**

4.2.1 Power the board 9

4.2.2 Mode selection 9

5. Appendix **11**

5.1 Arduino Pin Map **11**

5.2 Pin headers' illustration **12**

5.2.1 3pin header for UART0 13

5.2.2 3pin header for UART1/Extended UART 13

5.2.3 3pin header for 3.3V/5V select 13

5.2.4 2pin header for ISP_ENTRY 13

5.2.5 2pin header Reserved 13

© TrueSense S.r.l All Rights Reserved.

1. Introduction

VULKANO allows easy development of customers' SW application and product thanks to Its flexible configuration that gives the option to be used either as an Arduino Host or Shield. Stand-alone it can be used with its on board NXP QN9090 (CPU with Bluetooth LE 5.0), NXP SE051 (Secure element), G-sensor and DCU150/040/023 plug in.

2. Kit Contents

The VULKANO Evaluation Kit is composed of 3 parts: QN9090 Carrier Board, DCU 040 Module adapter board and DCU 150 Module adapter board.

2.1 QN9090 Carrier Board

A hardware carrier board host a QN9090 MCU for BLE application development. Carrier Board comprises:

- On-board PCB antenna for Bluetooth LE;
- LED, Blue color, for working status indication;
- Arduino connector used to connect Expansion Board, single row 2.54mm pin header at bottom side;
- Connectors for UWB module daughterboard, 1pcs SMD1.27mm 2x20 socket and 2pcs SMD 1.27mm 2x5 socket;
- CR2032 battery connector so that the board can work with a CR2032 button battery and no need to plug external USB power supply in a short time;
- A toggle switch for battery power on/off;
- SPST switches between external Arduino board and QN9090;
- An acceleration sensor IC, Silan SC7A20, ±2g, ±4g, ±8g, ±16g 3-axis;
- A digital pressure sensor, Goertek SPL006-01;
- Plug & Trust Secure Element IC, SE051;
- A Reset Button for QN9090;
- USB Type-C connector, to power the board and also with a USB to UART IC in board provided interface that can connect QN9090 UART directly and download program via ISP.

© TrueSense S.r.l All Rights Reserved.

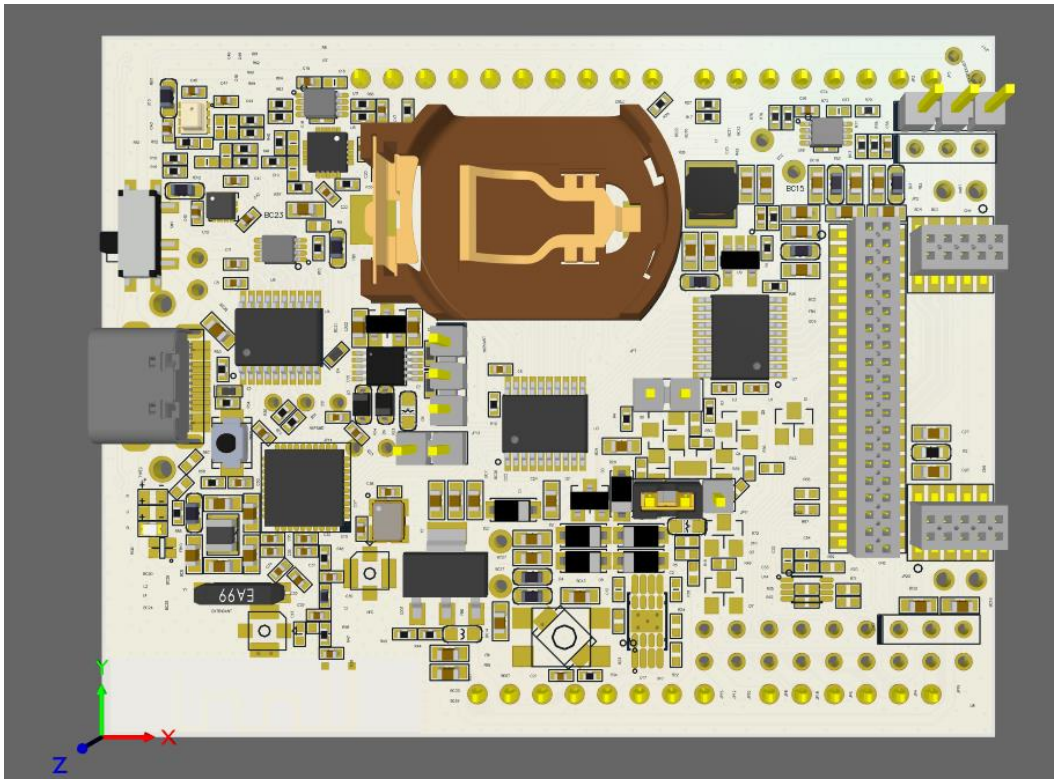

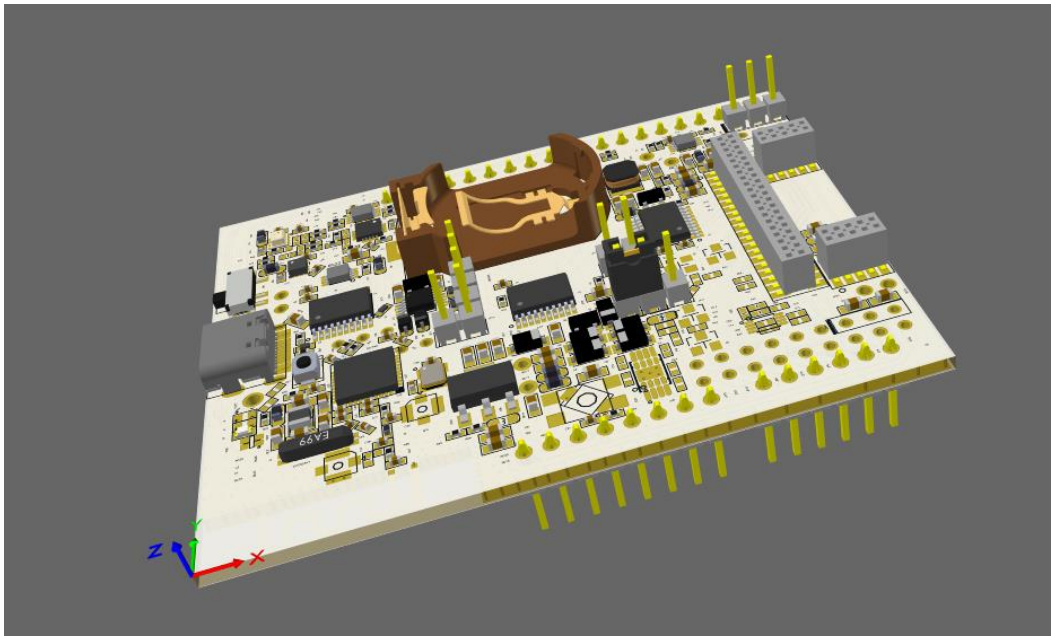

© TrueSense S.r.l All Rights Reserved.

2.2 DCU 040 Module adapter board

A daughterboard with DCU040 UWB module, NXP SR040 solution and on-board PCB antenna.

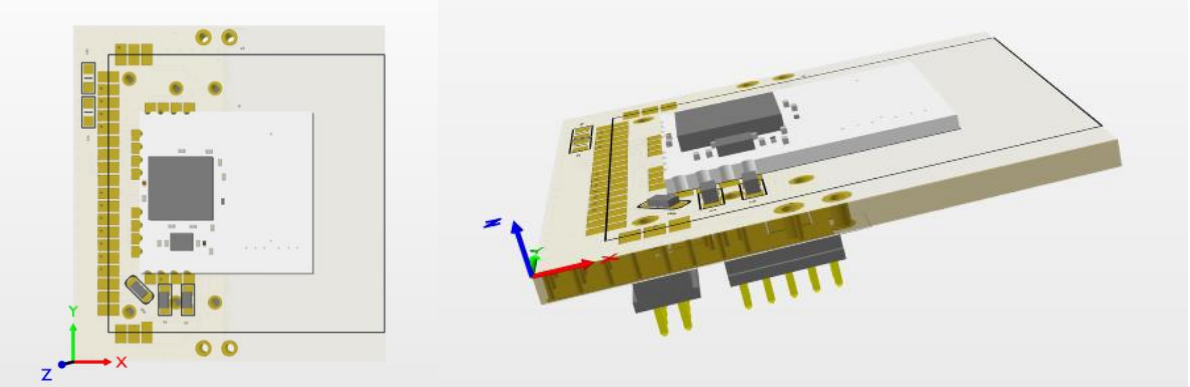

2.3 DCU 150 Module adapter board

A daughterboard with DCU150 UWB module, NXP SR150 solution and on-board PCB antennas.

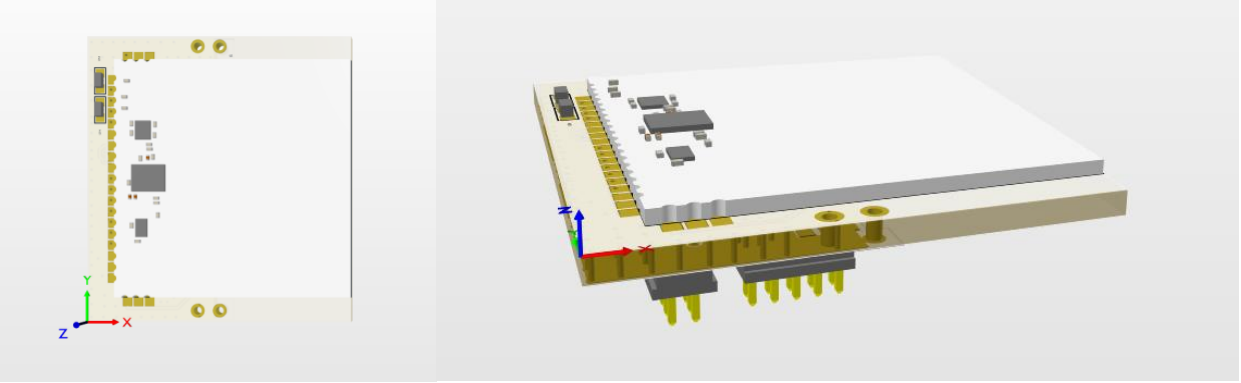

© TrueSense S.r.l All Rights Reserved.

3. Block Diagram

UWB Development Kit

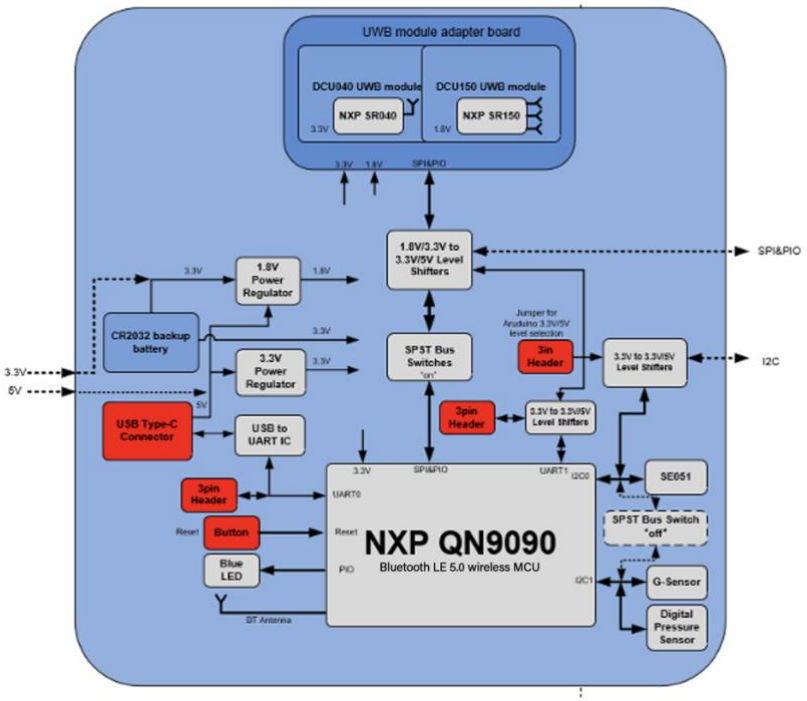

Arduino Board + UWB Development Kit

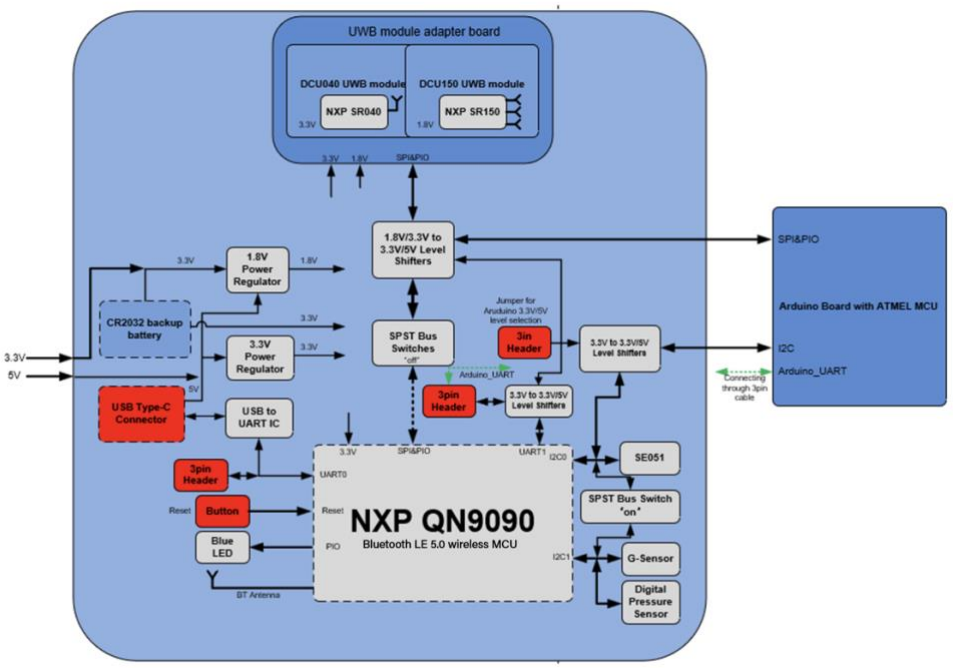

© TrueSense S.r.l All Rights Reserved.

4. Connect hardware

4.1 Plug DCU040 or DCU 150 adapter board to Carrier board

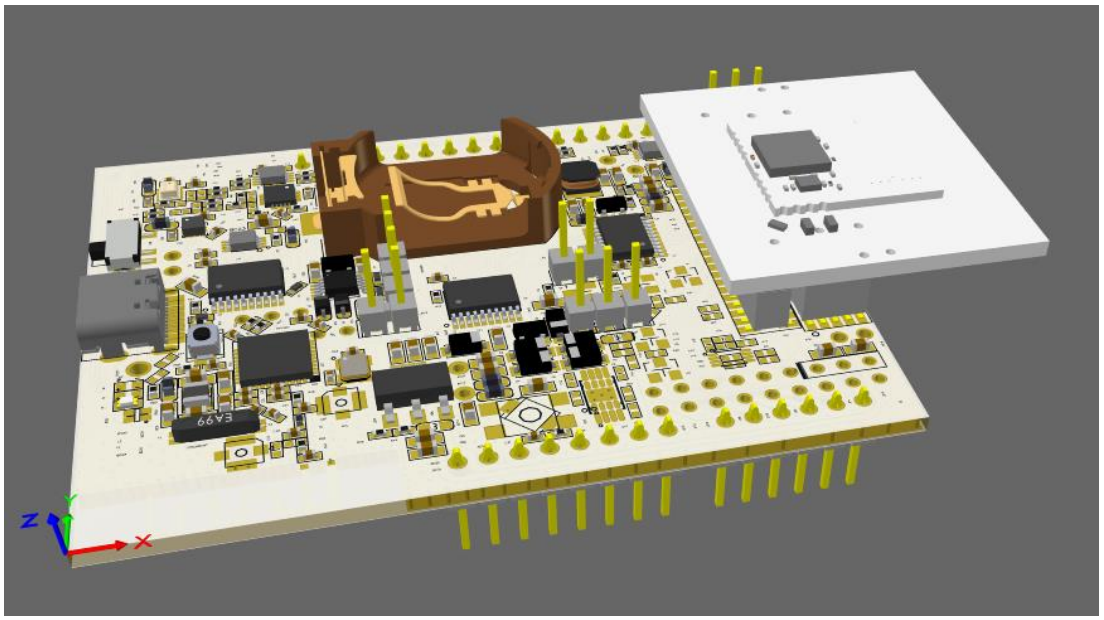

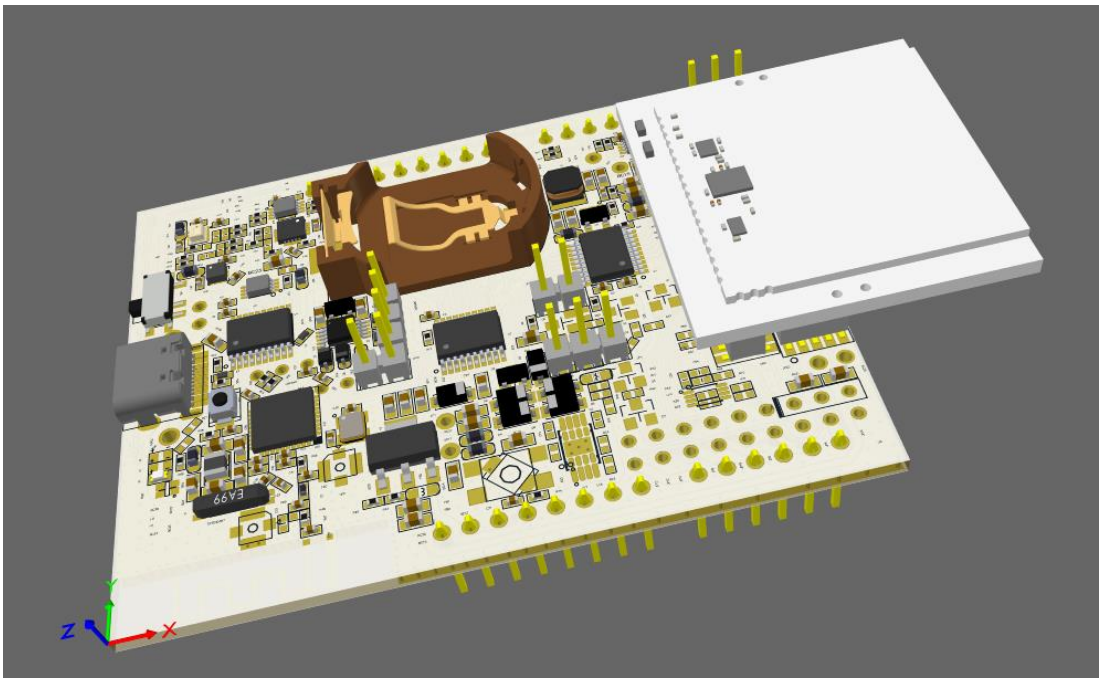

© TrueSense S.r.l All Rights Reserved.

4.2 Power the board & Mode Selection

4.2.1 Power the board

Either use an USB type-C cable to power the QN9090 board with USB 5V power or use the CR2032 coin battery to power it with 3.3V power. If with the coin battery, the side toggle switch must be switched to 'on'. Please be aware that coin battery is only for QN9090, not for Arduino. The toggle switch should be switched to 'off' if with Arduino board.

4.2.2 Mode selection

This development kit has 3 working mode as below:

4.2.2.1 QN9090 mode

Power the QN9090 board and no other board connected, then QN9090 can work with DCU040/DCU150 directly.

4.2.2.2 Arduino mode working directly with DCU040/DCU150

Plug QN9090 Board to Arduino Board like below, then SPI&PIO bus of DCU040/150 and I2C bus of sensor are switched to external Arduino board automatically.

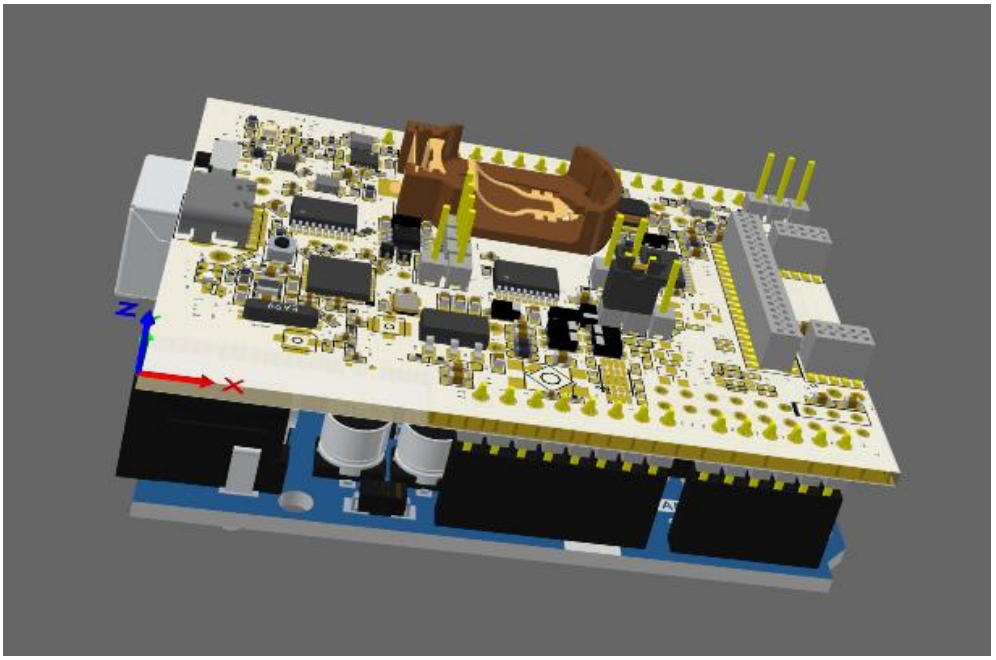

© TrueSense S.r.l All Rights Reserved.

Be careful:

Before powering the Arduino board, check carefully the signal level of Arduino board, or it will damage the board. Since we already knew that Arduino UNO R3 board is with 5V signal level, so below 3pin header should be set to 5V position with Jumper like below:

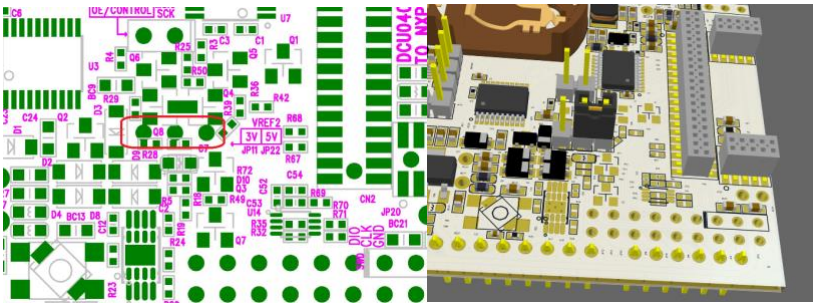

For other board with Arduino pins but with 3.3V signal level, the jumper should be set to 3.3V position.

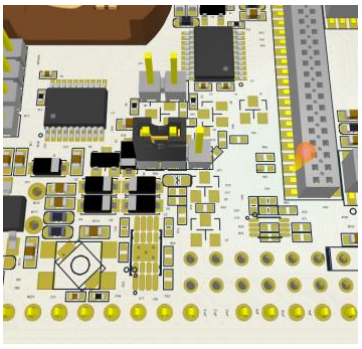

4.2.2.3 Arduino mode working through QN9090

Since Arduino UNO R3 board is with ATMega328P MCU and only 2KB SRAM while QN9090 is with 152KB RAM, Arduino UNO R3 is not powerful enough to control DCU040/150.

So maybe the possible way is sending AT command to QN9090 through UART, then QN9090 control DCU040/150. With this mode, you may need 3-pin 2.54mm flat cable to connect the QN9090 UART1, see below for the 3pin header's position.

be careful:

1. With this mode, QN9090 board is not plugged to Arduino board.
2. Like above 4.2.2.2, before powering QN9090 board and Arduino board, check the signal level of Arduino or other board, 3.3V or 5V, and set the jumper to proper position.

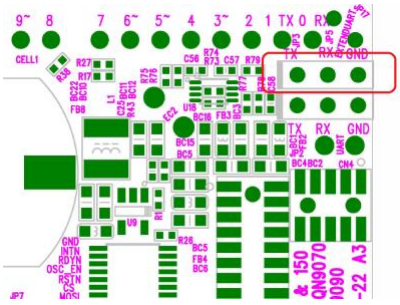

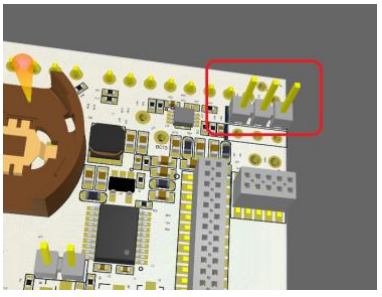

© TrueSense S.r.l All Rights Reserved.

5. Appendix

5.1 Arduino Pin Map

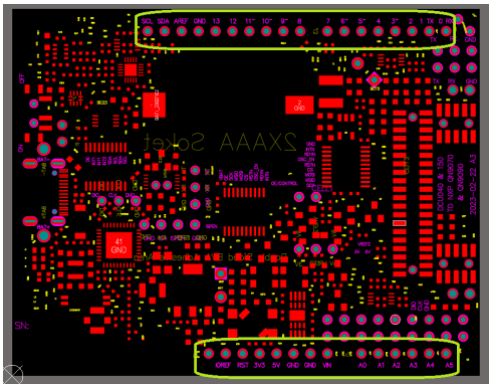

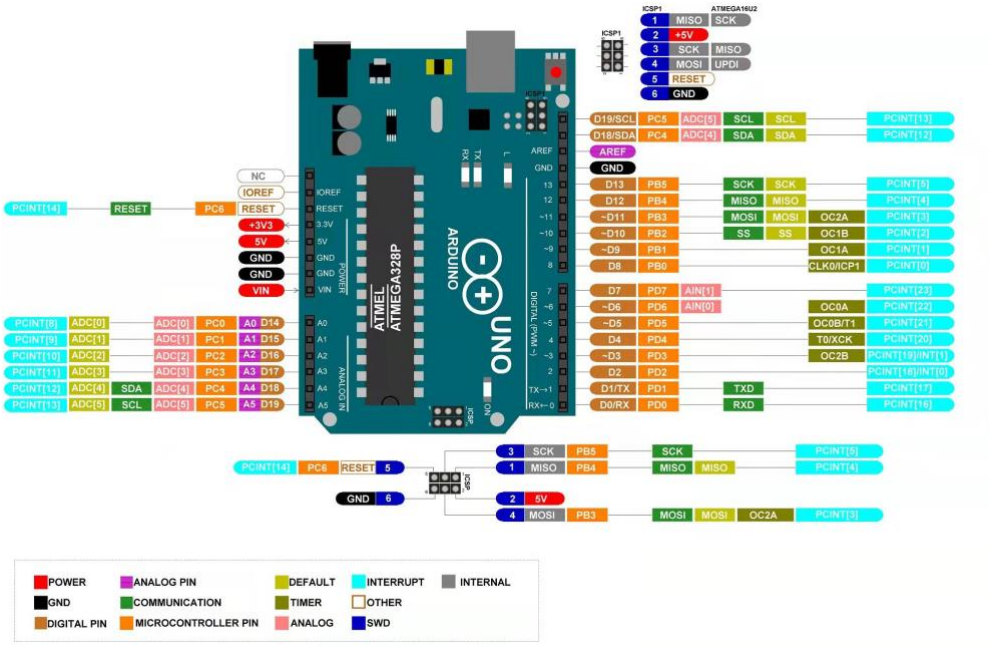

Pin No.	Arduino Pin Name	NXP SR040	NXP SR150
1	0~ RX (PCINT16/RXD) PD0		
2	1~ TX (PCINT17/TXD) PD1		
3	2~ (PCINT18/INT0) PD2	P15/INT_N	GPIO_05_HOST_INT
4	3~ (PCINT19/OC2B/INT1) PD3	P16/RDY_N	GPIO_03_IRQ
5	4~ (PCINT20/XCK/T0) PD4		
6	5~ (PCINT21/OC0B/T1) PD5		
7	6~ (PCINT22/OC0A/AIN0) PD6		
8	7~ (PCINT23/AIN1) PD7		
9	8~ (PCINT0/CLKO/ICP1) PB0		
10	9~ (OC1A/PCINT1)PB1	RST_N	CHIP_EN
11	10~(SS/OC1B/PCINT2)PB2	P14/CS_N	HOST_CS

© TrueSense S.r.l All Rights Reserved.

12	11~(MOSI/OC2A/PCINT3)PB3	P20/SDIO	HOST_MOSI
13	12~ (MISO/PCINT4)PB4	P21/SDI	HOST_MISO
14	13~ (SCK/PCINT5) PB5	P17/SCLK	HOST_SCK
15	GND		
16	AREF		
17	SDA		
18	SCL		
19	NC		
20	IOREF		
21	RESET		
22	3.3V		
23	5V		
24	GND		
25	GND		
26	VIN		
27	PC0(ADC0/PCINT8)A0		
28	PC1 (ADC1/PCINT9)A1		
29	PC2 (ADC2/PCINT10)A2		
30	PC3 (ADC3/PCINT11)A3		
31	PC4 (ADC4/SDA/PCINT12)A4		
32	PC5 (ADC5/SCL/PCINT13)A5		

5.2 Pin headers' illustration

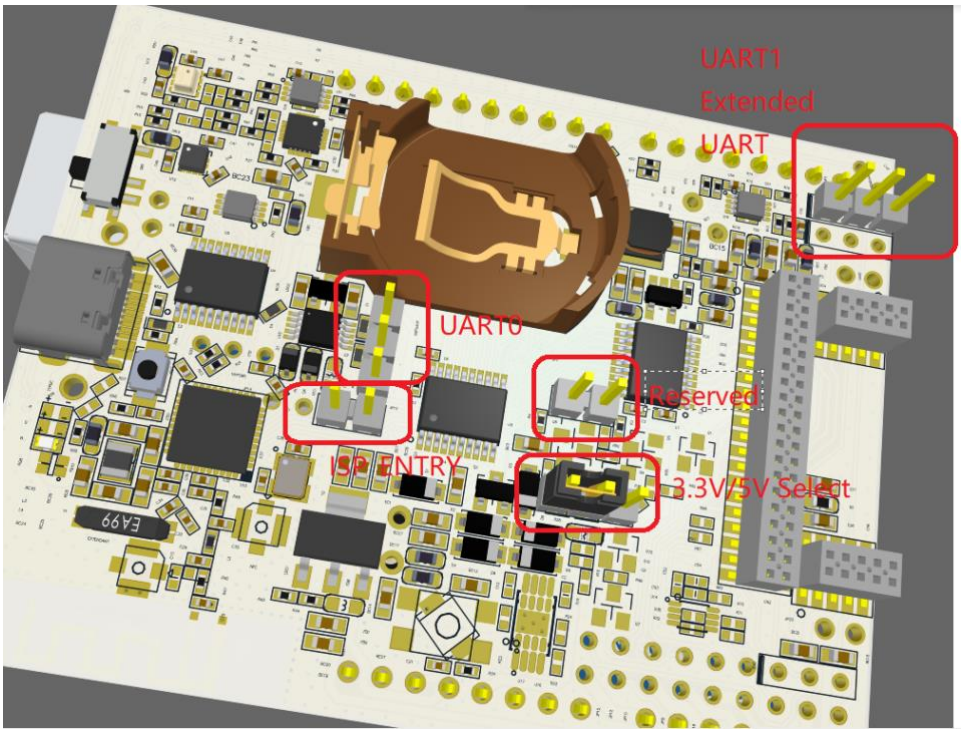

© TrueSense S.r.l All Rights Reserved.

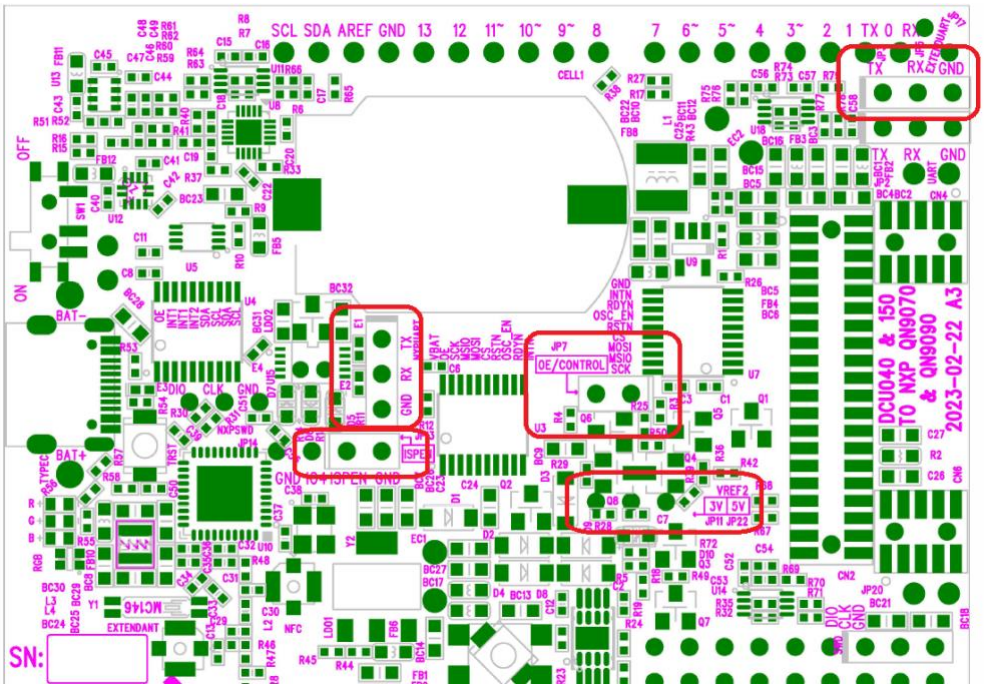

5.2.1 3pin header for UART0

UART0 is used for programming. Normally this internal 3pin UART is not used. We can do the ISP by USB Type-C connector since we have USB to UART on board. However if you really want to use this 3pin UART, be careful this UART signal level is 3.3V only.

5.2.2 3pin header for UART1/Extended UART

See above 4.2.2.3

5.2.3 3pin header for 3.3V/5V select

See above 4.2.2.2

5.2.4 2pin header for ISP_ENTRY

This 2pin header is used for In-System Programming Mode Selection. In ISP mode, set a jumper to this position, and remove the jumper at normal working mode.

5.2.5 2pin header Reserved

This 2pin header is reserved for control the OE signal of SPST switches. When QN9090 board is plugged to Arduino board, and if you want force the SPI&I2C&PIO buses still connected to QN9090, you can add Jumper to this position. Normally it should be not used.

© TrueSense S.r.l All Rights Reserved.