Datasheet

ETNA TS 250 DevKit

Version 1.0

© TrueSense S.r.l All Rights Reserved.

Revision History

Revision	Date	Change Description
1.0	April 21, 2025	Preliminary version

© TrueSense S.r.l All Rights Reserved.

Table of Contents

1. Introduction 4
2. Key Features 5
   2.1 Basic Spec 5
   2.2 Block Diagram 6
   2.3 Pinout 7
   2.3.1 The Arduino UNO connectors pinout 7
   2.3.2 The 2 high-density connectors pinout 8
3. Rating 9
   3.1 Recommended Operating Conditions 9
4. Mechanical Information 10
   4.1 Board Dimensions. 10
   4.2 Board Connectors. 10

© TrueSense S.r.l All Rights Reserved.

1. Introduction

ETNA TS 250 DevKit Board is a development kit with TSRR 250 UWB Ranging & Radar Module and level translators on board.

The ETNA TS 250 DevKit we can exploit the TSRR 250 module that supports 3D AoA and Radar processing algorithm enabling Presence Detection & 2D pre- processed CIR streaming allowing advanced ML/AI applications.

It can be directly plugged into and work with Arduino UNO board or other Dev boards which have Arduino UNO connectors, like NXP FRDM-RW612, and also it has 2 pcs 80pin high-density female socket which can have Arduino Portenta C33/H7 board plugged into it.

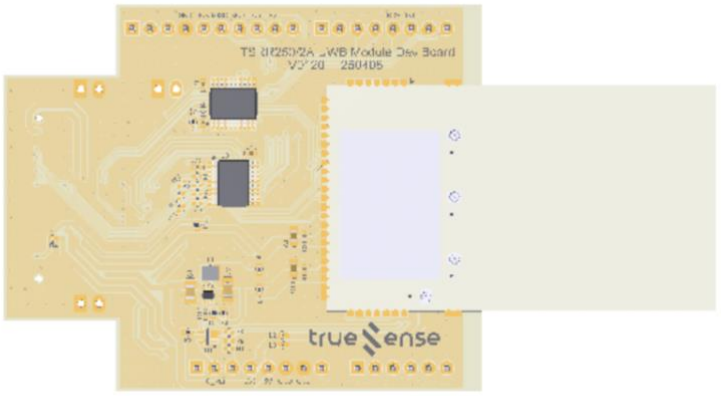

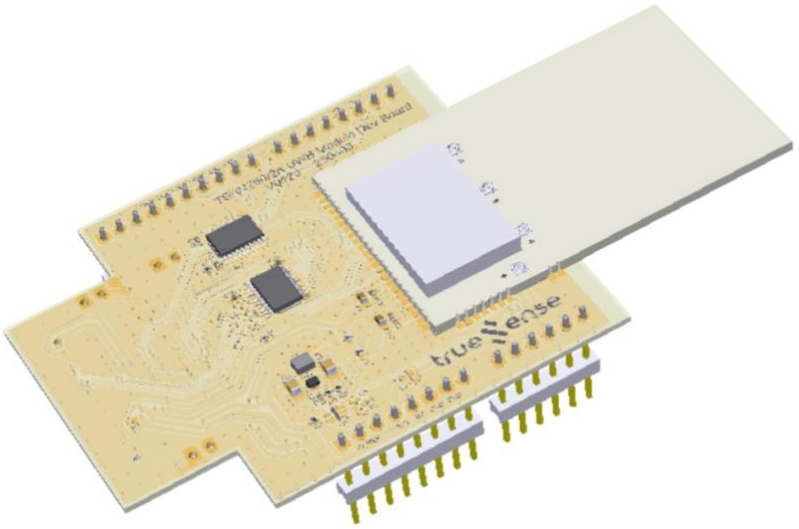

© TrueSense S.r.l All Rights Reserved.

2. Key Features

2.1 Basic Spec

Component	Details
TSRR 250	NXP SR250 UWB Transceiver, IEEE 802.15.4z HRP UWB Standard, 6.24-8.24GHz, CH5&CH9
	3 x On Board PCB Patch Antenna x3 + 1x I-PEX MHF-4 connector for external antenna
	Radar Mode: supports OCPD,CIRs & Off CRP
	Ranging Mode: supports ToF, 3D AoA, TDOA, RTLS
	ARM® Cortex-M33 32 Bit processor at 125 MHz – 384 kB eNV memory for code and data storage allowing fast boot – 2 x 32 kB RAM, additional 32 kB RAM in retention – 128 kB ROM – ARM® TrustZone technology and S-DMA for security
	Modem DSP at 250 MHz – Programmable DSP (BSP32 CoolFlux subsystem)
	Real Time Clock

- 1.8V to 3.3V/5V Level Shifters;
- Power Supply:

-external 3.3V power supply connected through the 2 high density board to board connector,

-external 5V power supply connected through the 2.54mm Arduino UNO connectors;

- Dimension: 101mmx55mm.

© TrueSense S.r.l All Rights Reserved.

2.2 Block Diagram

An overview of the ETNA TS250 DevKit high-level architecture is illustrated in Figure 1.

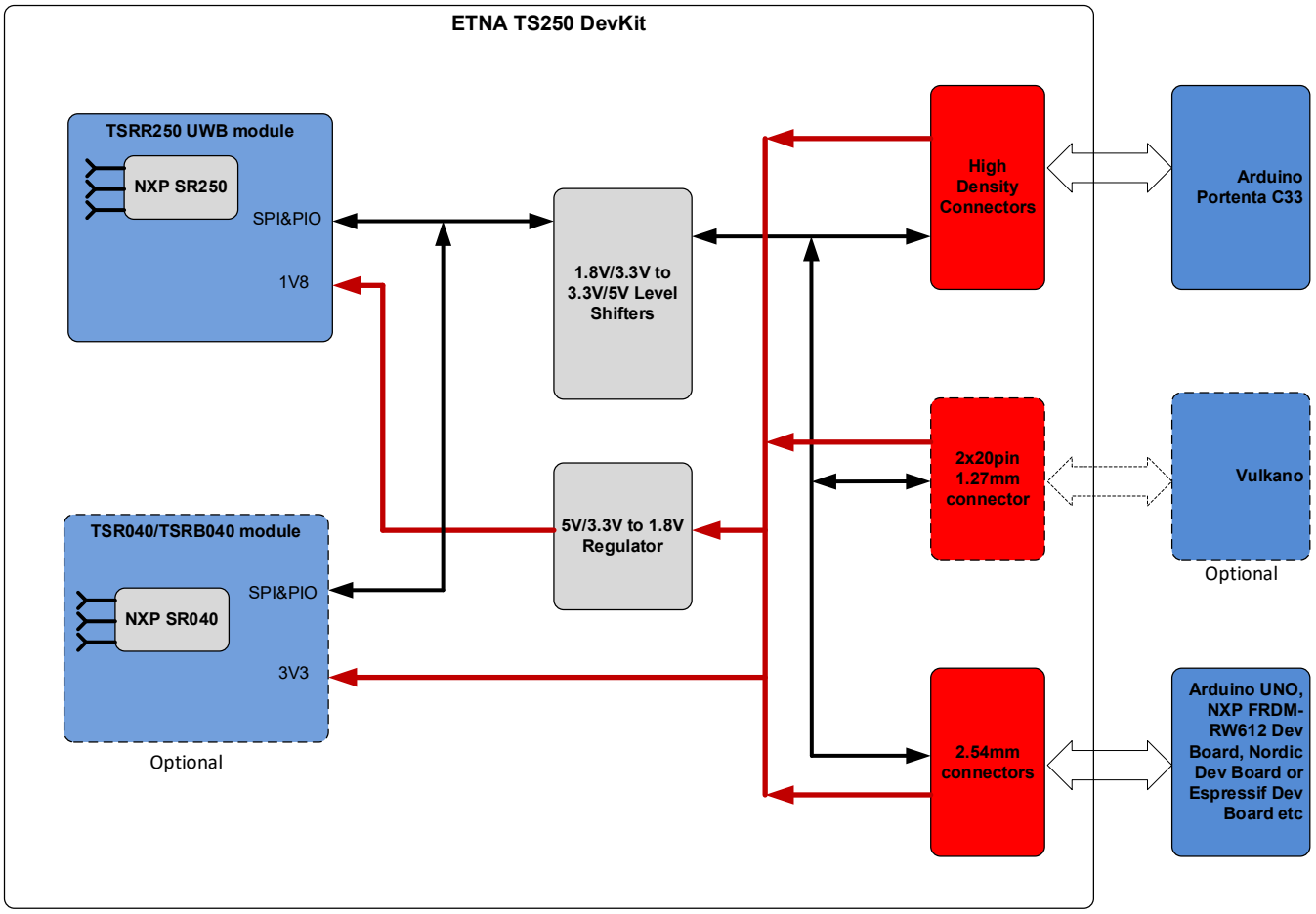

Figure 1. High-level architecture of the ETNA TS 250 DevKit

© TrueSense S.r.l All Rights Reserved.

2.3 Pinout

2.3.1 The Arduino UNO connectors pinout

The Arduino UNO connectors pinout is shown in Figure 2.

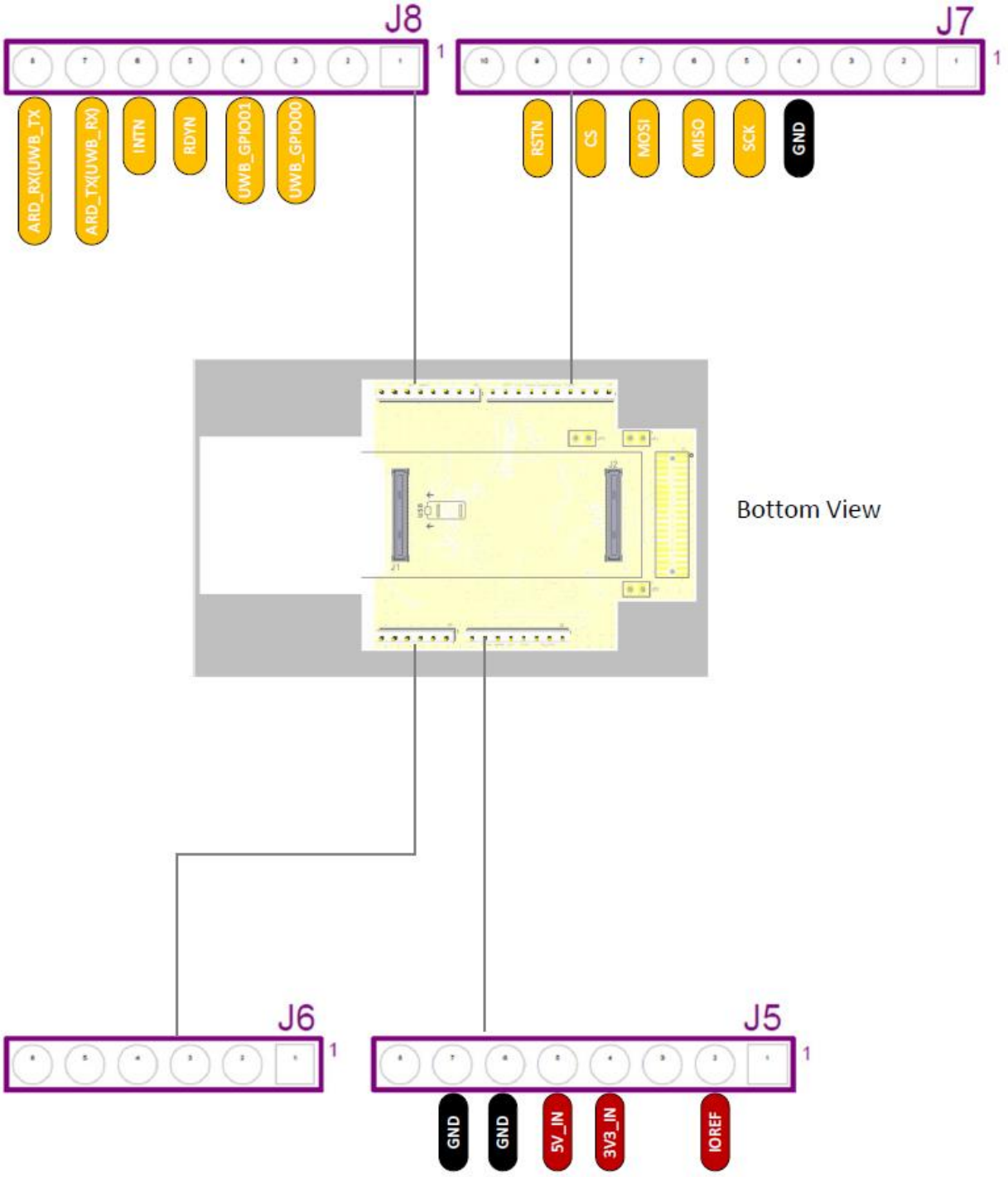

Figure 2. ETNA TS 250 DevKit pinout (Arduino UNO Connectors)

© TrueSense S.r.l All Rights Reserved.

2.3.2 The 2 high-density connectors pinout

The 2 high-density connectors pinout is shown in Figure 3.

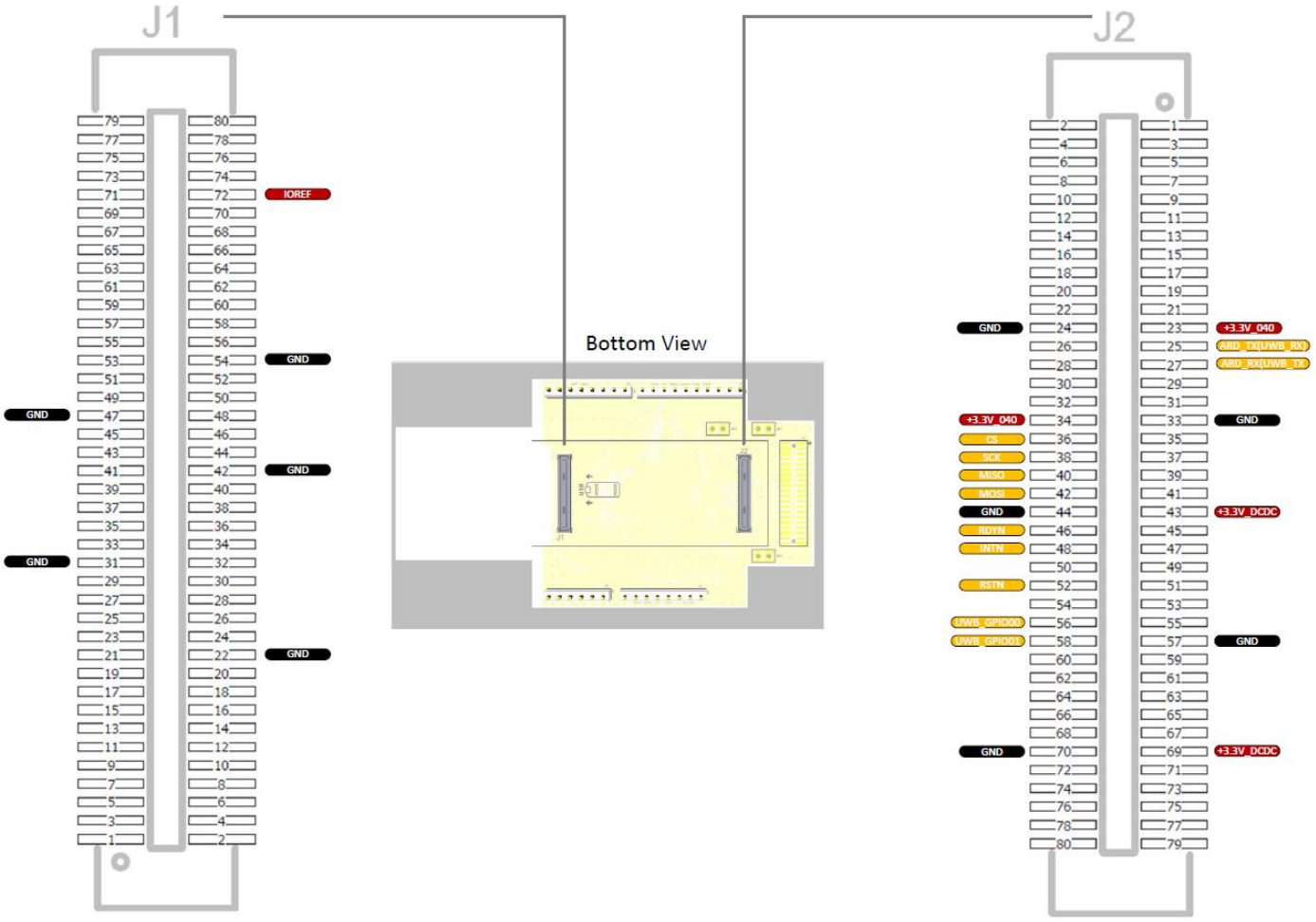

Figure 3. ETNA TS 250 DevKit pinout (2 high-density Connectors)

© TrueSense S.r.l All Rights Reserved.

2.3.3 The I-PEX MHF-4L receptacle for external Radar Antenna

The I-PEX MHF-4L receptacle connector for external Radar Antenna is shown in figure 4.

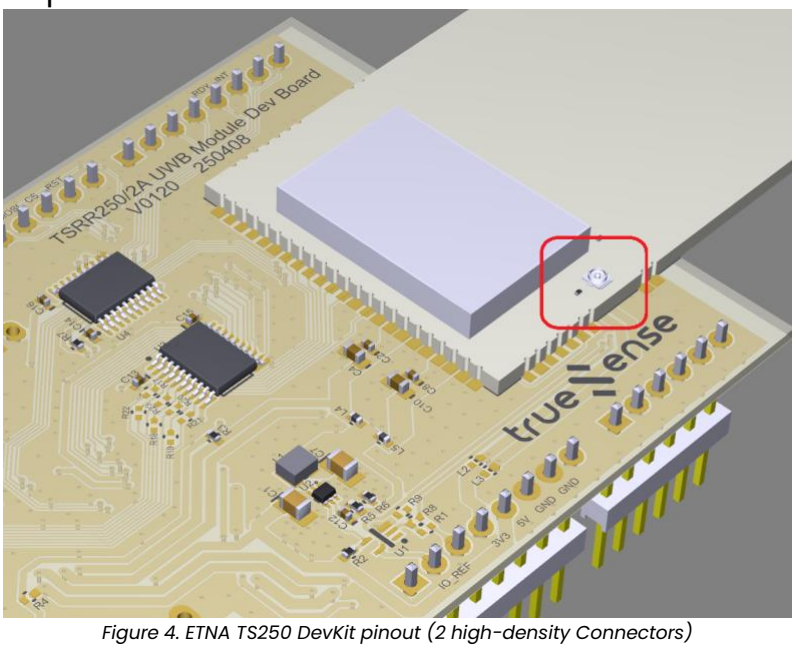

Figure 4. ETNA TS250 DevKit pinout (2 high-density Connectors)

Plugging the external antenna to this MHF-4L connector as TX antenna, and using a patch antenna as RX antenna, enables the Radar function with best TX-RX isolation.

3. Rating

3.1 Recommended Operating Conditions

Below table provides a comprehensive guideline for the optimal use of the ETNA TS 250 DevKit, outlining typical operating conditions and design limits. The operating conditions of ETNA TS 250 DevKit are largely a function based on its component's specifications.

Parameter	Symbol	Min	Typ	Max	Unit
External Power Supply Input Voltage from the 2 high density connectors	VIN	3.0	3.3	3.6	V
External 5V power supply connected through the 2.54mm Arduino UNO connectors	VIN	4.5	5.0	5.5	V
Operating Temperature	TOP	-30	-	85	ºC

© TrueSense S.r.l All Rights Reserved.

4. Mechanical Information

The ETNA TS 250 DevKit is a double-sided 68 mm x 55 mm board with TSRR250 UWB module overhanging the bottom edge, and Arduino UNO 2.54mm connectors & 2 high-density connectors on the bottom side of the board.

4.1 Board Dimensions.

ETNA TS 250 DevKit board-outline dimensions can be seen in Figure 5.

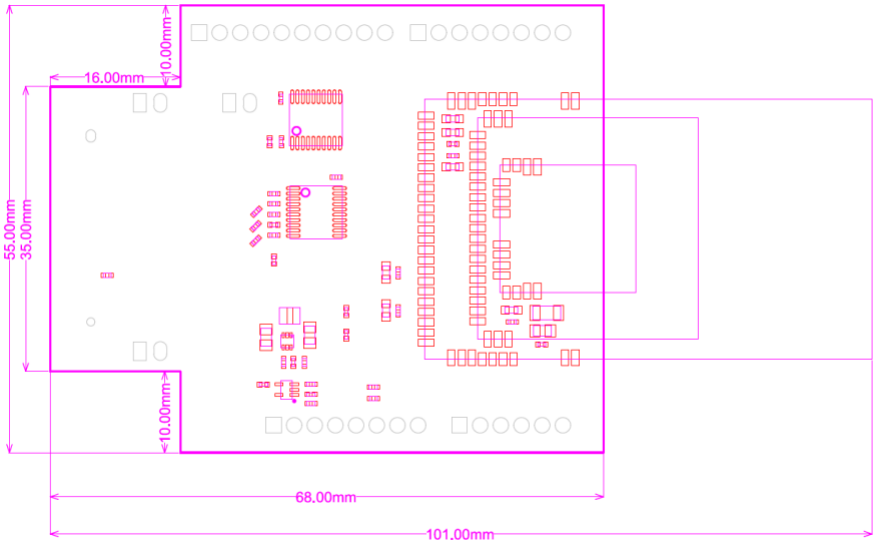

Figure 5. ETNA TS 250 DevKit board-outline

4.2 Board Connectors

Connectors of the ETNA TS 250 DevKit board are placed on the bottom side of the board, their placement can be seen in Figure 6.

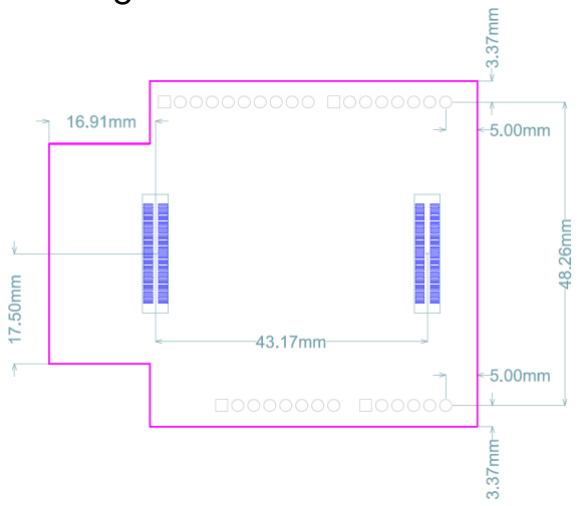

Figure 6. ETNA TS 250 DevKit connectors placement (top view)

© TrueSense S.r.l All Rights Reserved.